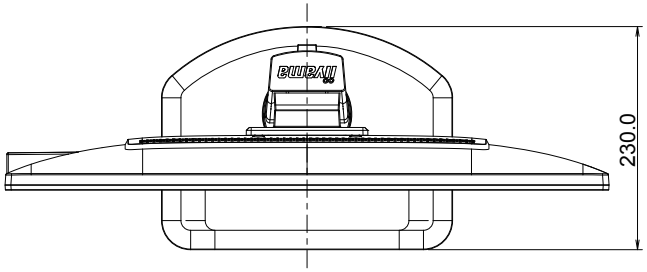
230.0

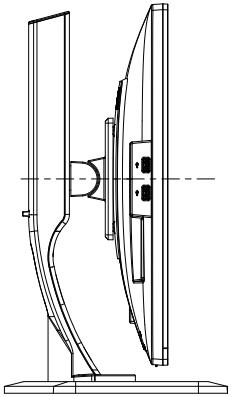

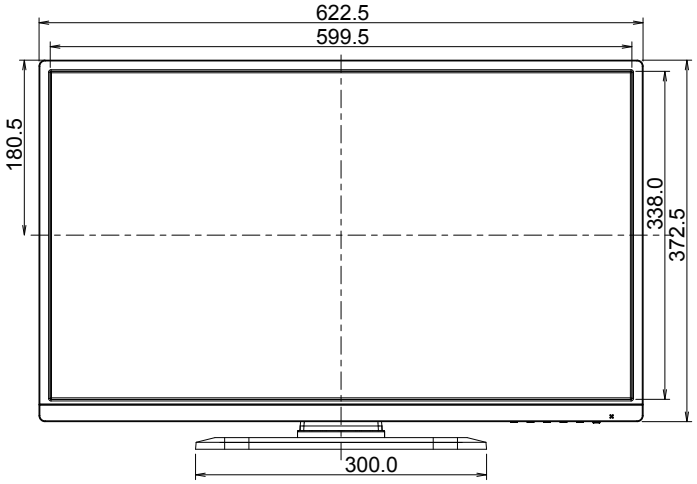
622.5
599.5
180.5
338.0
372.5
300.0

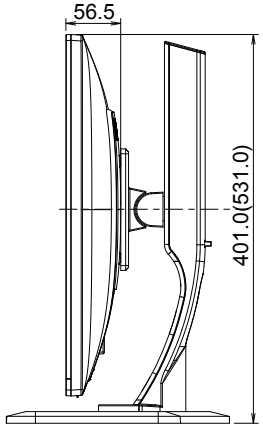
56.5
401.0(531.0)

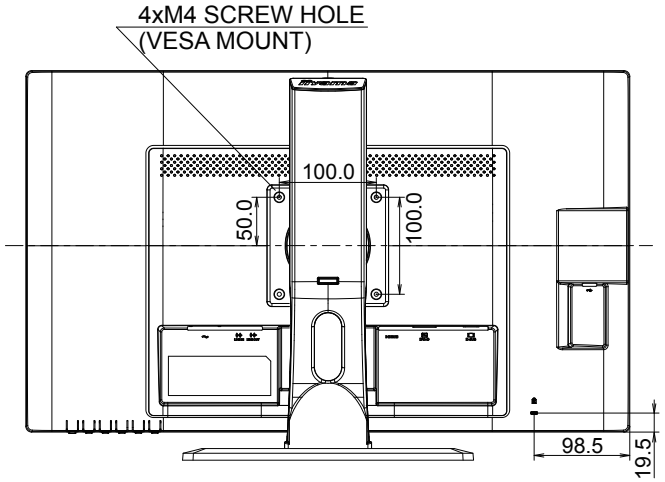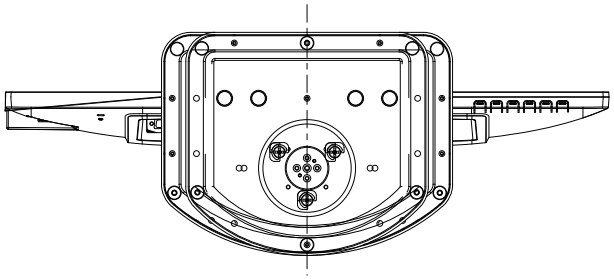
4xM4 SCREW HOLE
(VESA MOUNT)
100.0
50.0
100.0
98.5
19.5